VTO4202F-P1

2-wire IP Modular Apartment Door Station



- Anodized aluminum front panel.
- CMOS low illumination 2MP HD colorful 168.6° camera.
- Video intercom function.
- Provides 12 VDC, 600 mA power.
- Mobile phone app, talk to the visitor or unlock the door remotely on your phone.
- IK07 & IP65 rated (silicone sealant is required for the shell, see the quick start guide).
- Support surface and flush mount.
- Support H.265 and H.264.
- Standard PoE power supply (if the VTO device with 12 V power output needs to charge the load, it should be connected to a PSE switch that complies with the 802.3.at standard).



Technical Specification

System

Main Processor	Embedded Processor
Operating System	Embedded Linux Operation System
Button Type	Mechanical
Number of Buttons	1
Interoperability	CGI; ONVIF
Network Protocol	UDP; TCP; IPv4; DNS; RTSP; UPnP; SIP; P2P; RTP

Basic

Camera	1/2.9" 2 MP CMOS
Field of View	H: 168.6°; V: 87.1°; D: 176.7°
WDR	120 dB
Noise Reduction	3D NR
Video Compression	H.265; H.264
Video Resolution	Main stream:720p; WVGA; D1; CIF Sub stream:1080p; WVGA; D1; QVGA; CIF
Video Frame Rate	25 fps
Video Bit Rate	256 Kbps to 8 Mbps
Light Compensation	Auto IR
Day/Night	Auto(ICR)/Color/B/W; Color/B/W
Audio Compression	G.711a; G.711u; PCM
Audio Input	1 channel
Audio Output	Built-in speaker
Audio Mode	Two-way audio
Audio Enhancement	Echo suppression/digital noise reduction
Audio Bit Rate	16 kHz, 16 bits

Function

Communication Mode	Digital 2-wire
Unlock Mode	Remote
Leave Videos	Yes (SD card is inserted in the indoor monitor or door station)
Storage	Supports Micro SD card (up to 256 GB)
Web Configuration	Yes

Performance

Casing Material	Aluminum

Capacity

Card Capacity	3000
Fingerprint Capacity	3000

Port

RS-485	1
Alarm Output	1
Power Output	1 port, 12 V/600 mA
Exit Button	1
Door Status Detection	1
Lock Control	1

Camera Module | VTO4202F-P1

Network Port	1 × RJ-45 port, 10/100 Mbps network port
Alarm	
Tamper Alarm	Yes
General	
Appearance Color	Silver
Power Supply	Dahua 2-wire switch (max. power supply distance is 50 m) 48 VDC, 1 A; PoE (802.3af/at)
Power Adapter	Optional
Installation	Flush Mount; Surface Mount
Certifications	CE
Accessory	Surface mount box (optional); flush mount box (optional); rain cover (optional)
Product Dimensions	100.0 mm × 100.0 mm × 49.4 mm (3.94" × 3.94" × 1.94")
Protection	IK07; IP65
Operating Temperature	–30°C to +60°C (–22°F to +140°F)
Operating Humidity	10%–90% (RH), non-condensing
Operating Environment	Outdoor
Operating Altitude	0 m–3000 m (0 ft–9842.52 ft)
Power Consumption	≤4 W (standby), ≤5 W (working)
Gross Weight	0.43 kg (0.95 lb)
Storage Temperature	0 °C to +40 °C (+32 °F to +104 °F)
Storage Humidity	30%–75% (RH), non-condensing

Accessories	VTM75	Vertical one module, surface mounted rain cover
	VTM52R2	Vertical two modules, surface mounted rain cover
	VTM53R3	Vertical three module, surface mounted rain cover
	VTM54R4	Vertical two*2 modules in parallel, surface mounted rain cover
	VTM56R6	Vertical two*3 modules in parallel, surface mounted rain cover
	VTM51R2	Vertical two modules with vertical rod, the cable goes out,It has the function of receiving the cable
	VTM61R2	Vertical two modules with vertical extended rod, the cable goes out,It has the function of receiving the cable
	VTM79	Mounting box for 1 module
	VTM127	Mounting box for 2 modules
	VTM128	Mounting box for 3 modules
	VTM77	Front panel for 1 module
	VTM125	Front panel for 2 modules
	VTM126	Front panel for 3 modules
Power Supply	VTNS2003B-2-A	2-wire Switch
	VTNS1001B-2-A	2-wire Switch

Installation

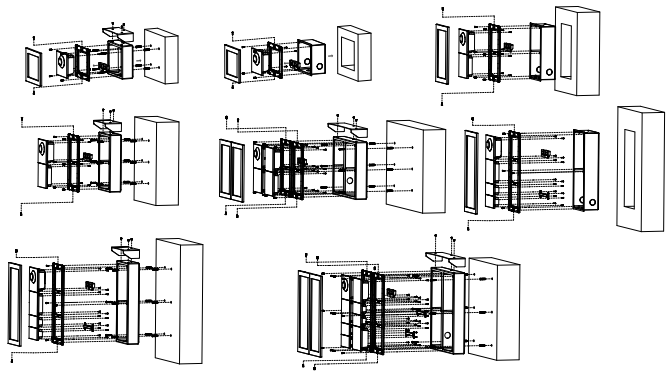

Dimensions (mm[inch])

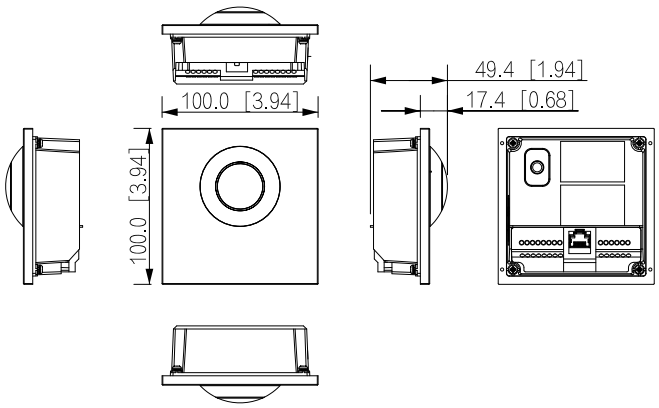

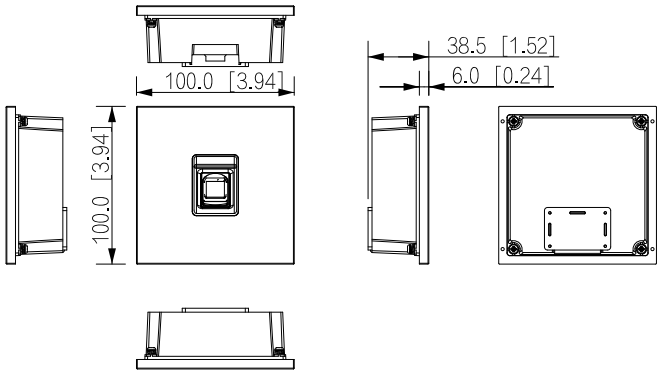

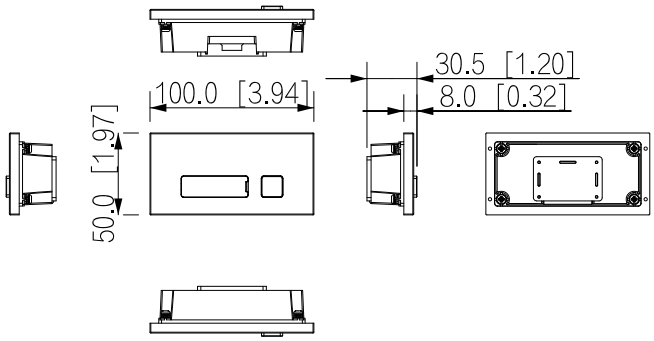

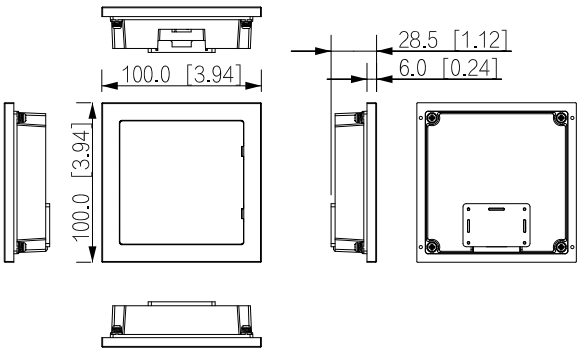

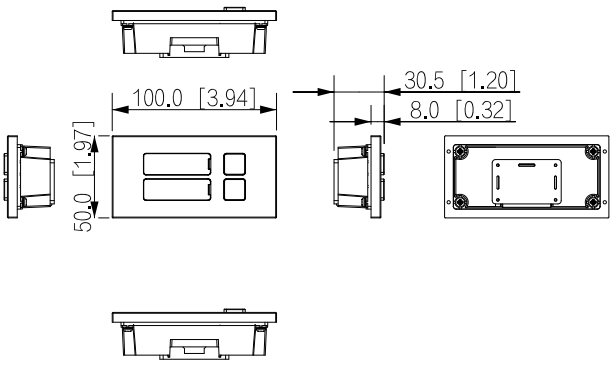

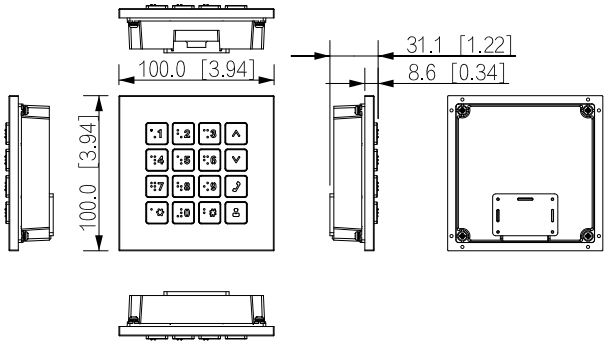

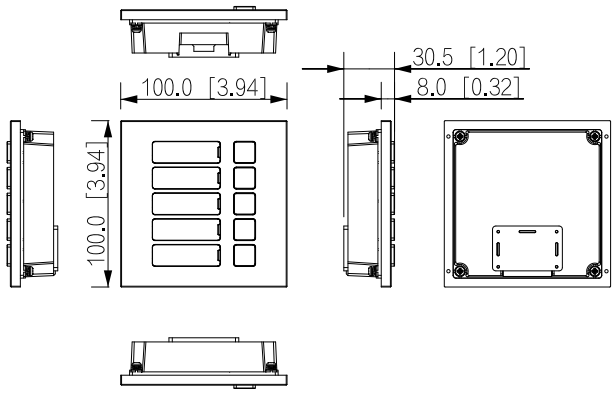

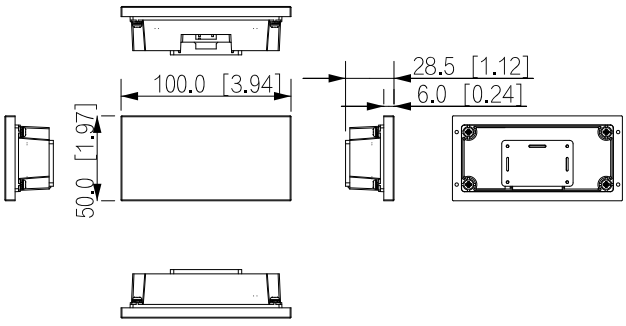

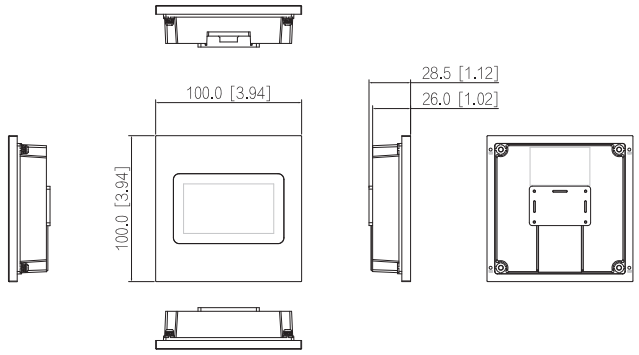

Application

